FAKRO EN	DSC-C2 P2	-	-	-

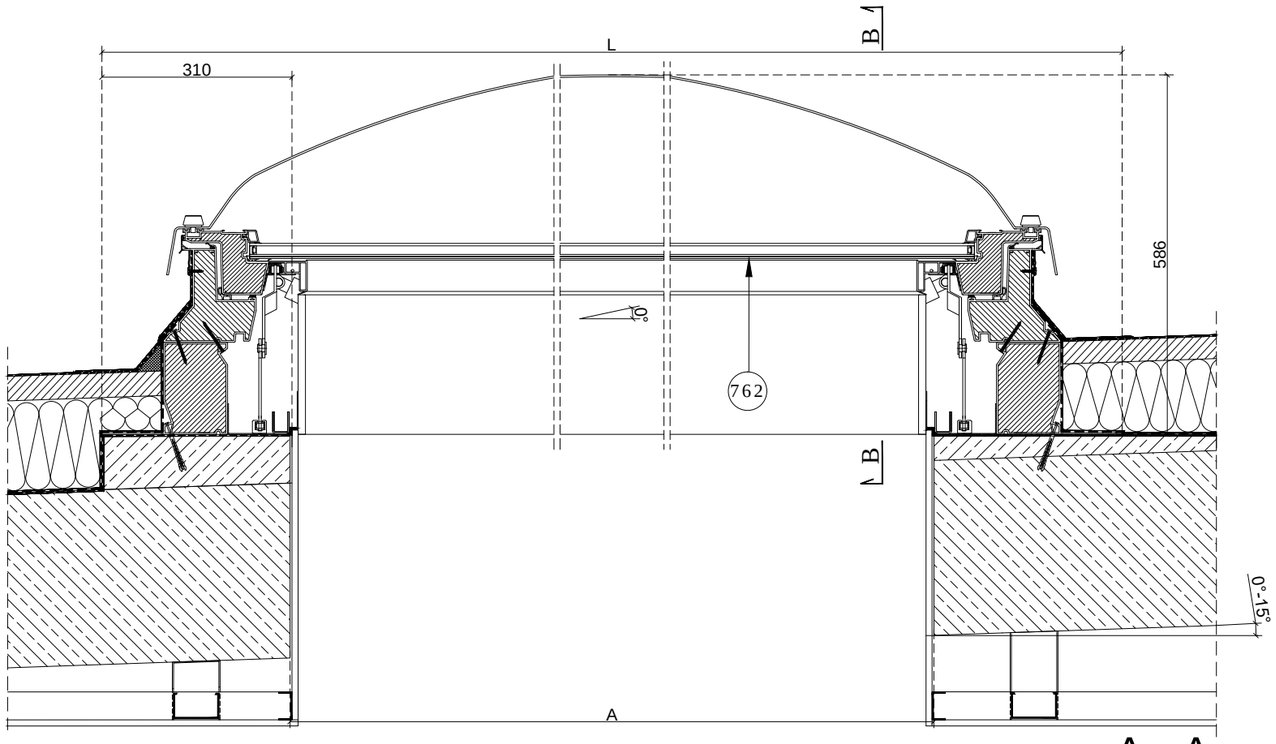

A - A

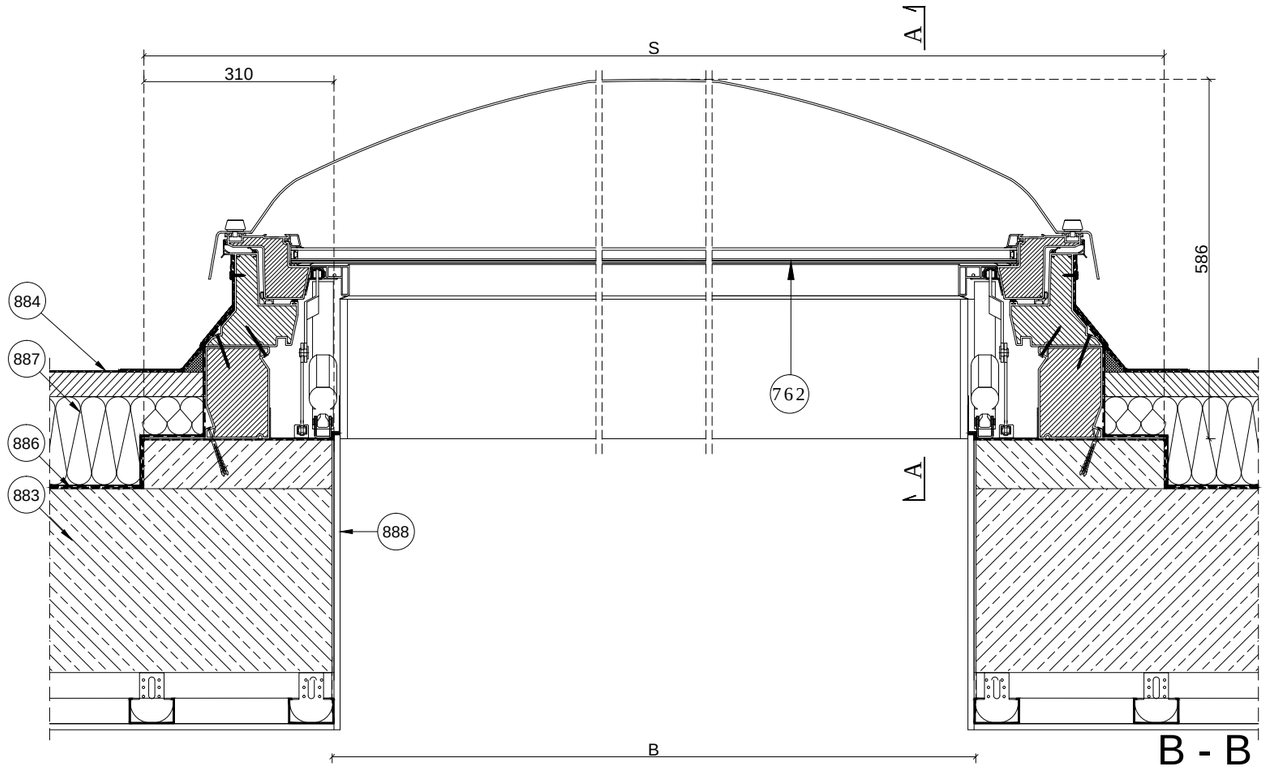

B - B

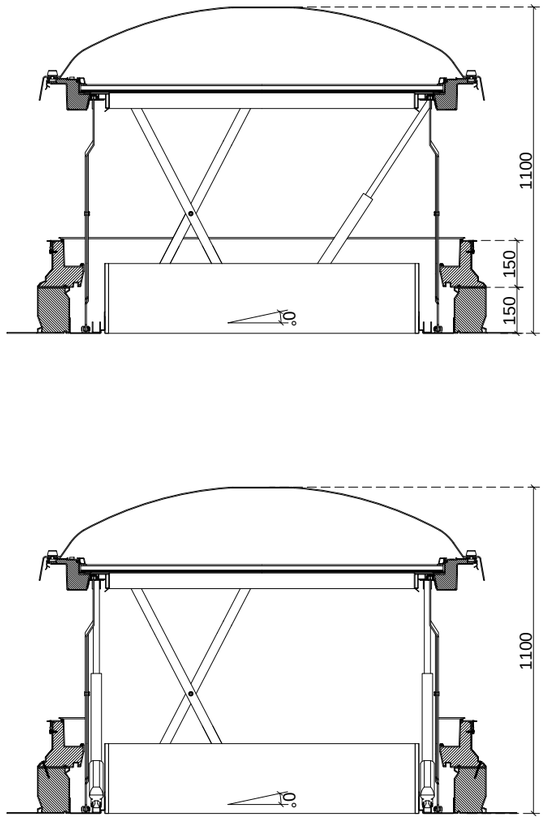

884-water proofing system
887-rigid thermal insulation
886-vapour control layer
883-structural deck e.g concrete
888-Plasterboard
762-DSC C2 P2 Flat roof smoke ventilation window FAKRO
with transparent dome,electrically opened, P2 glazing unit

DSC P2	A[mm]	B[mm]	S[mm]	L[mm]
100x100	1000-1030	1000-1030	1620	1620
120x120	1200-1230	1200-1230	1820	1820

FAKRO

DSC-C2 P2

BITUMINOUS ROOFING

0°-15°

Vertical and horizontal cross-section:
DSC C2 P2 Flat Roof Window, with transparent dome, electrically opened, P2 glazing unit.

FORMAT:	SCALE:	DATE:
A3	1:10/1:5	10.2021

Warning! The present drawing is for informational-demonstrative purposes only and as such cannot constitute a basis for performance. All dimensions presented in this drawing should be verified on site. Because of the fact that the drawing is a schematic one, FAKRO shall not assume any responsibility for the actual installation quality on the roof. This drawing is FAKRO's property and cannot be published or used publicly without our written consent.